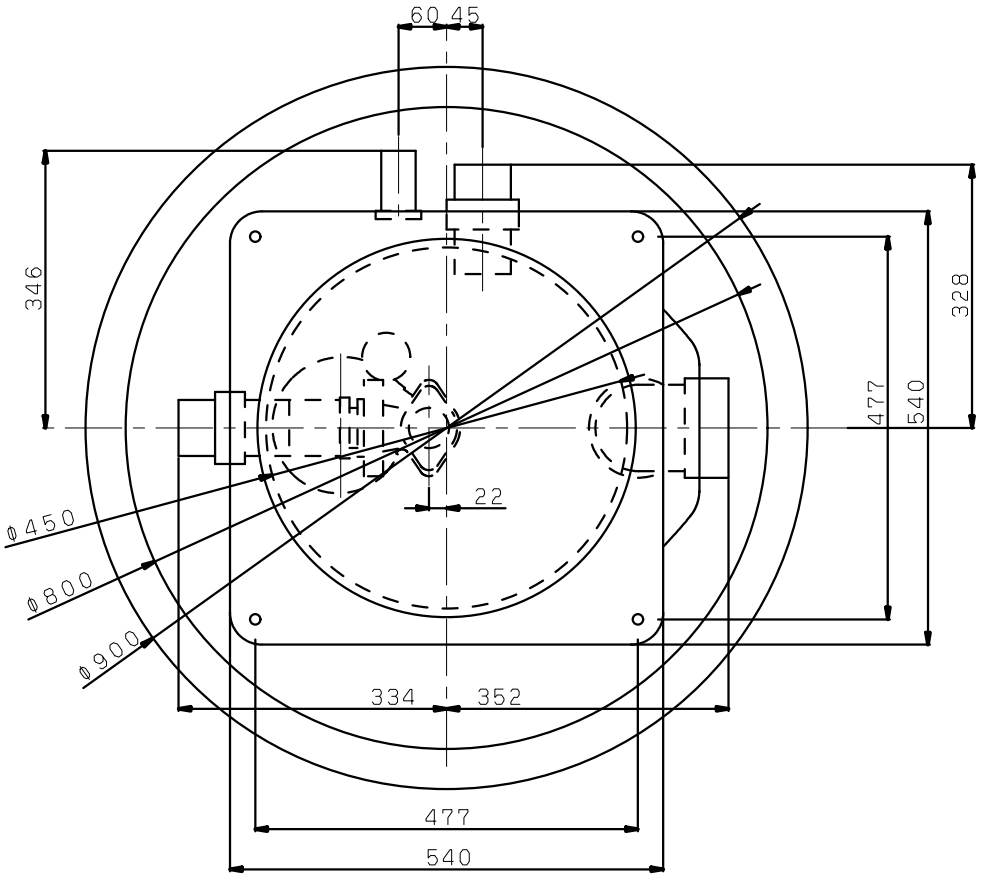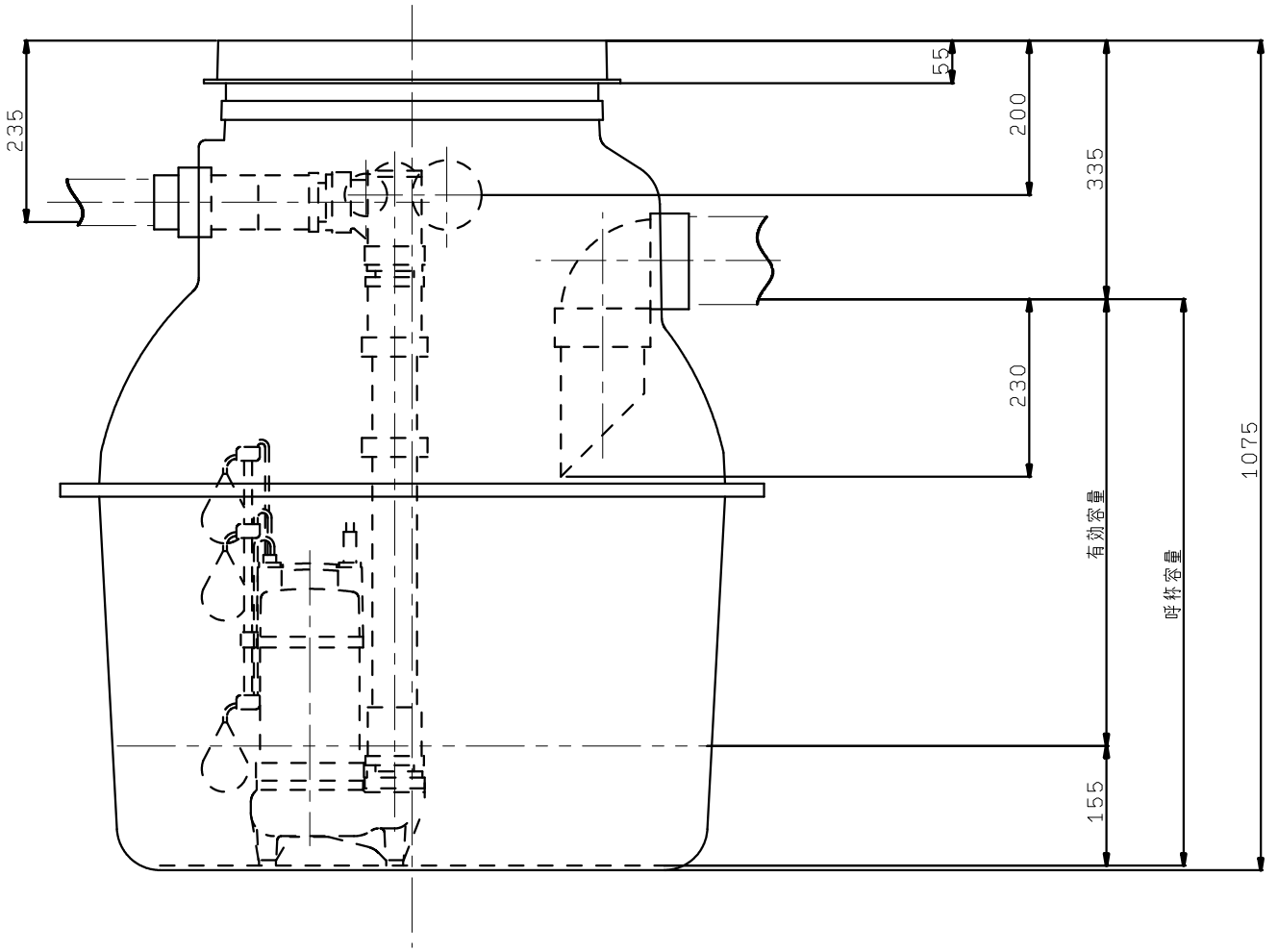TAZE2-30S50G