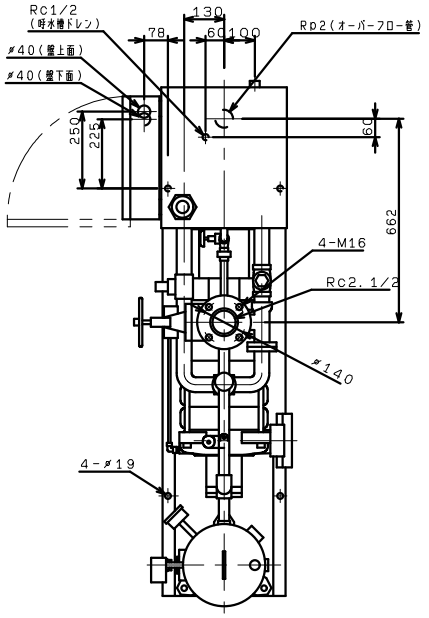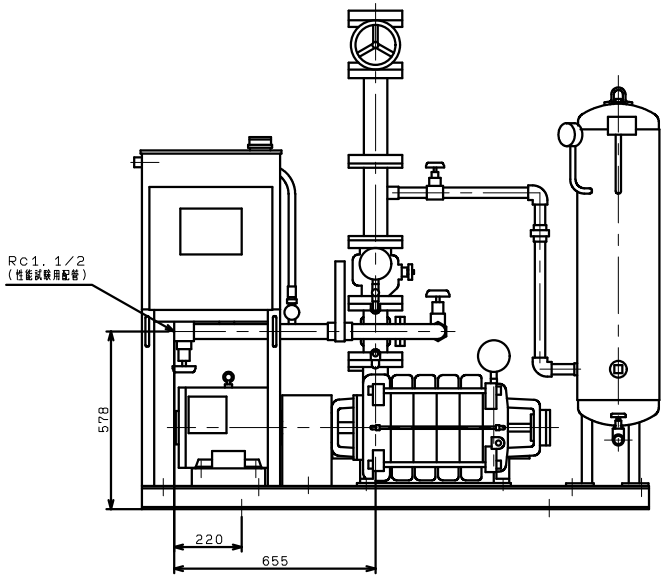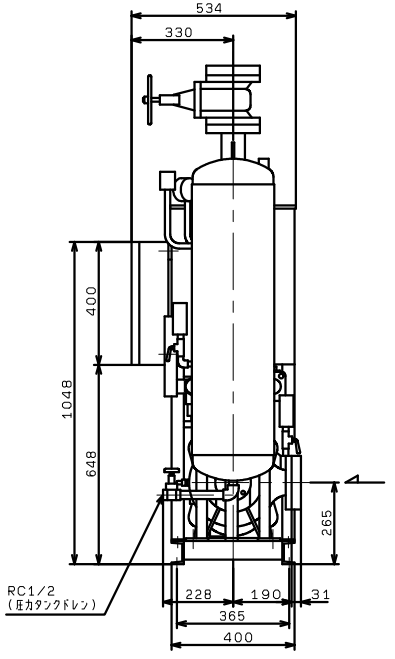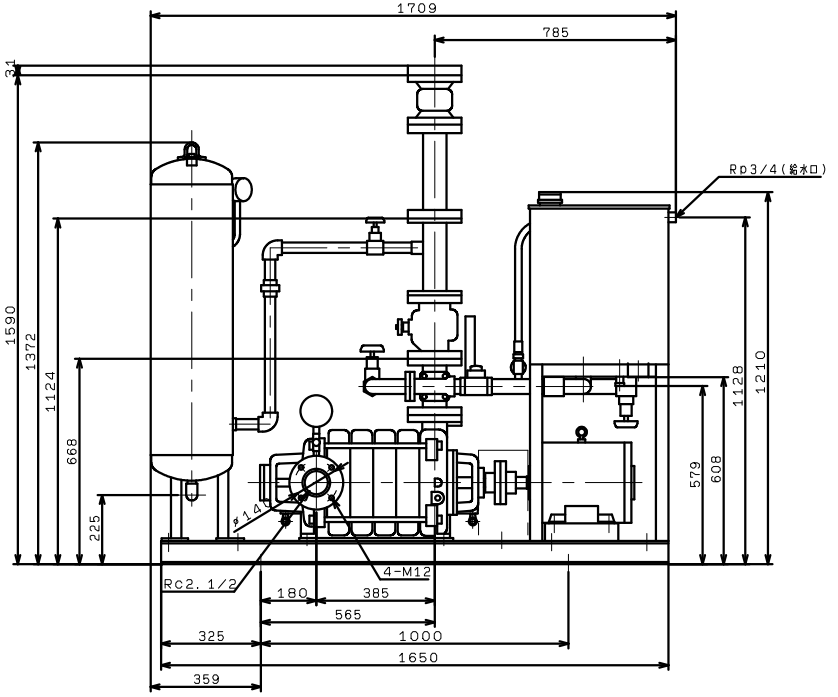KTY655A5ME7.5TP
KTY656A5ME7.5TP
VC:81