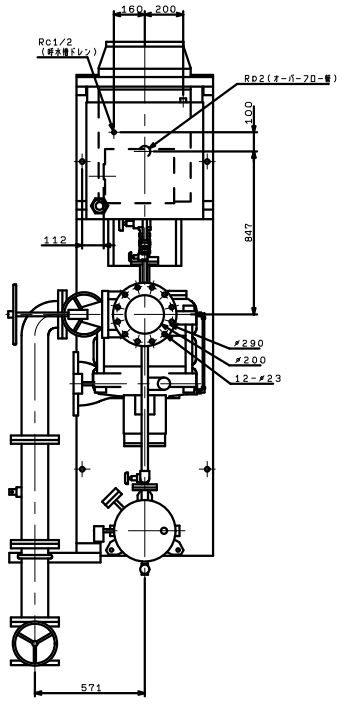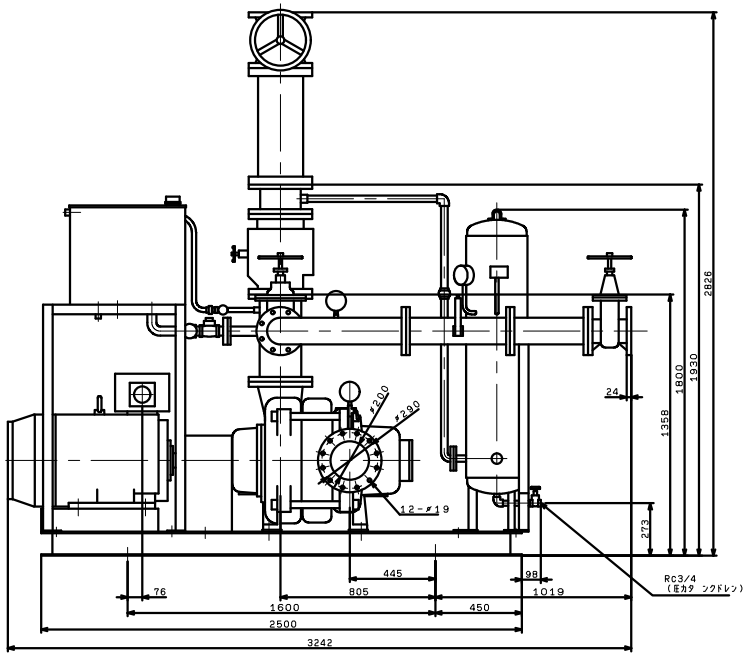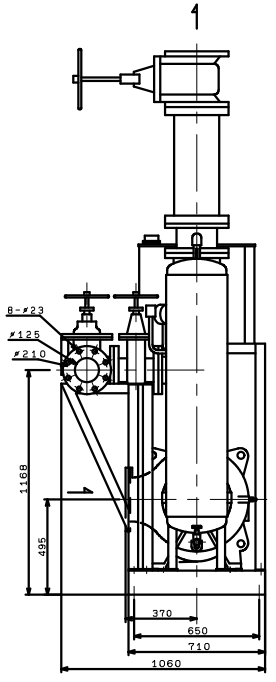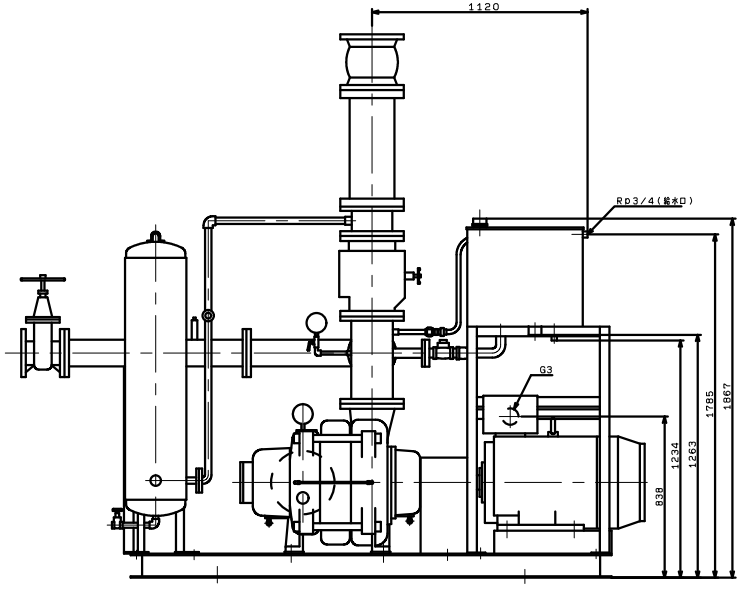KTY2005B2ME90TP
KTY2006A2ME90TP
KTY2006B2ME90TP
VC:84