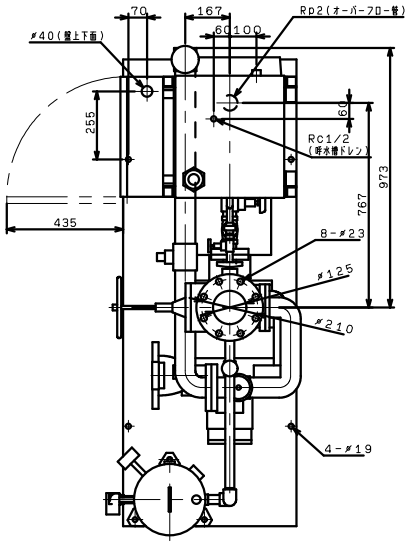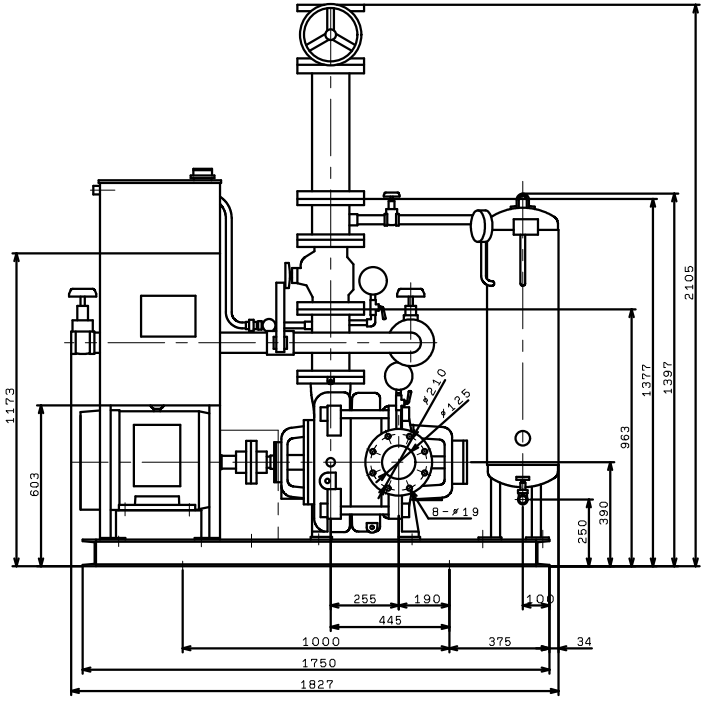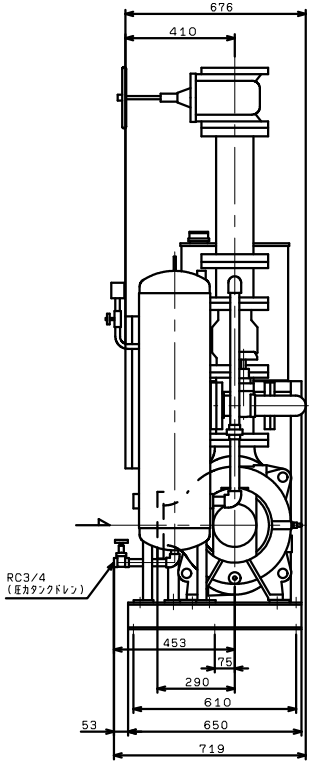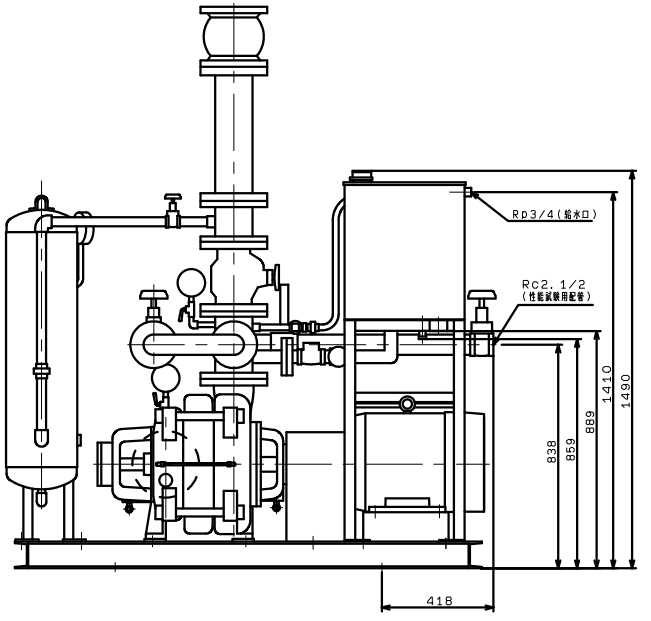KTY1255A2ME18TP
KTY1255B2ME18TP
KTY1256B2ME18TP
VC83