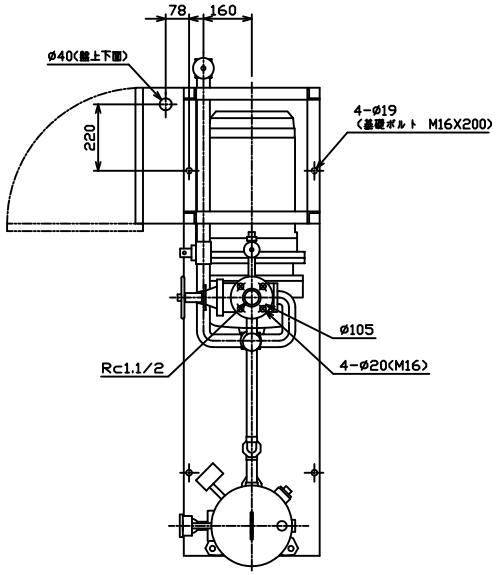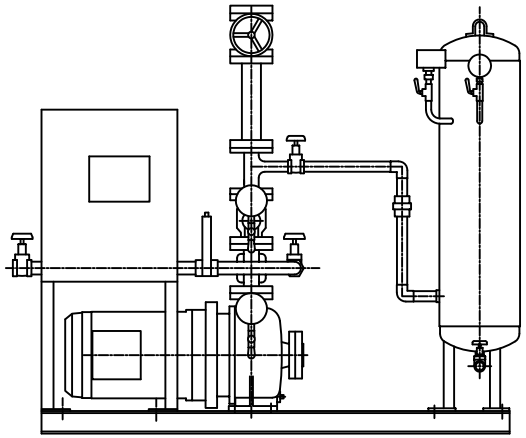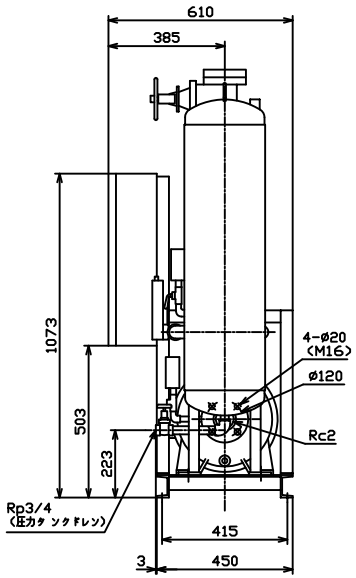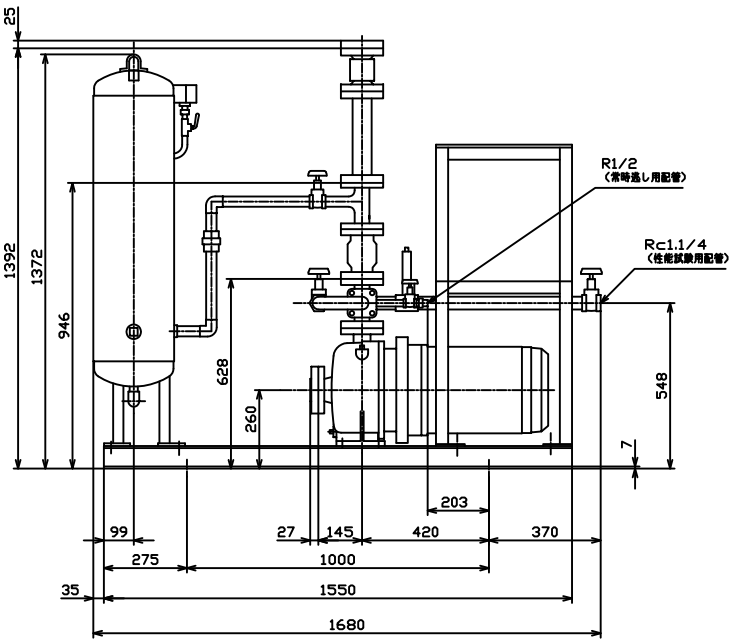KTK505CE11FP
KTK506CE11FP
標準, VC(46,47,76,91,96)