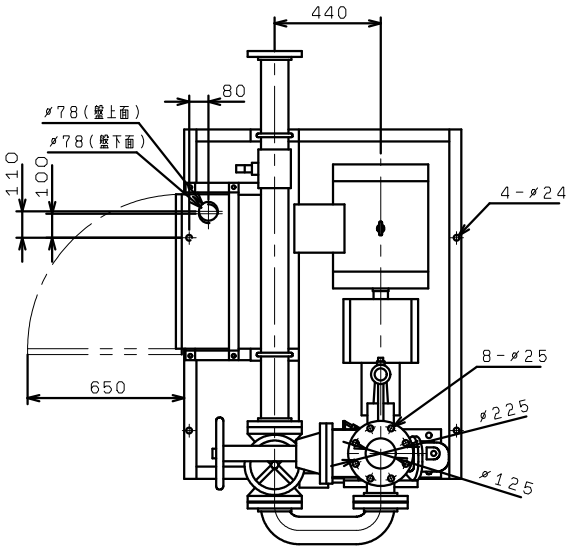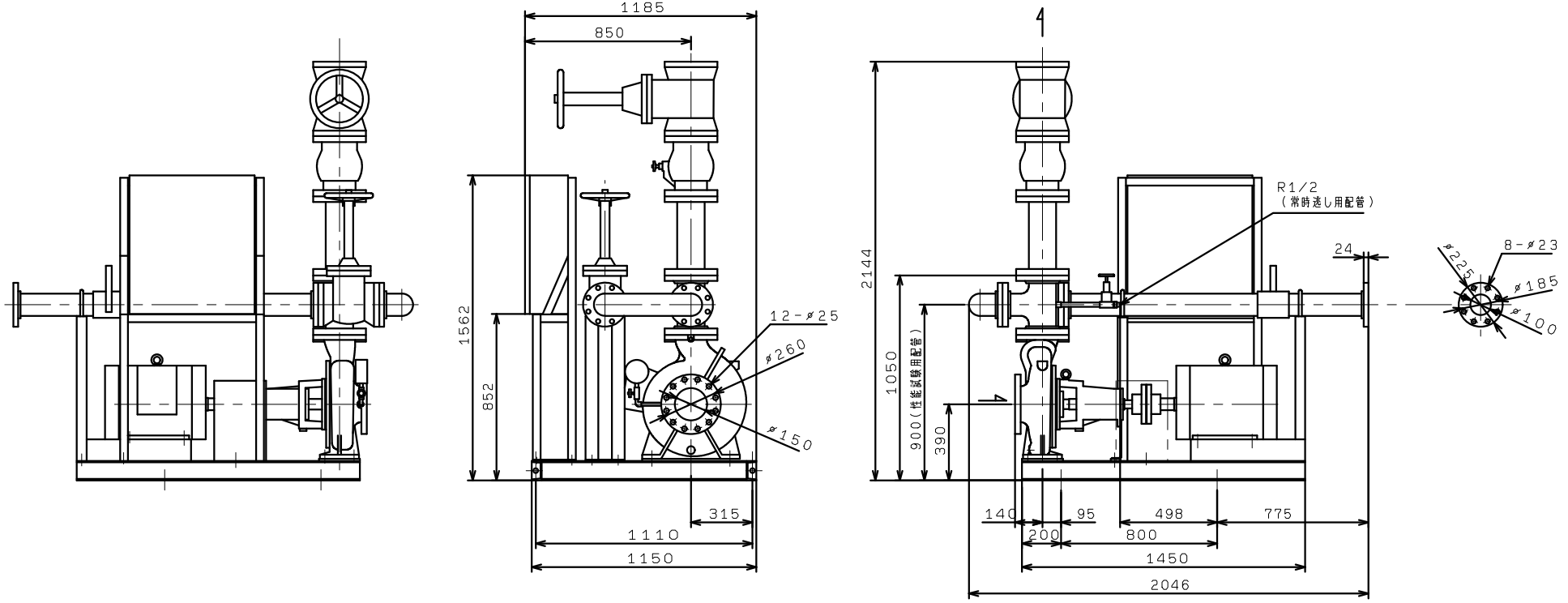KTGDFM1505ME37F
KTGDFM1506ME37F
KTGDFM1506ME45F