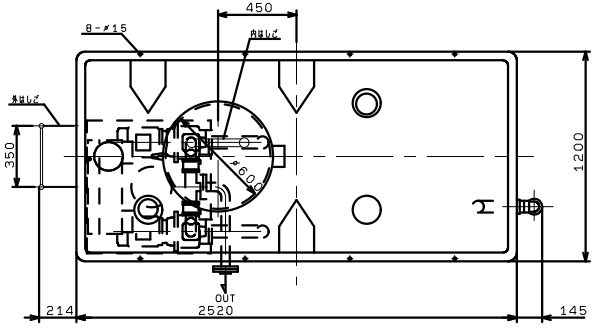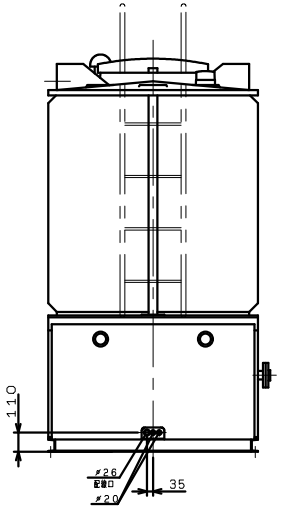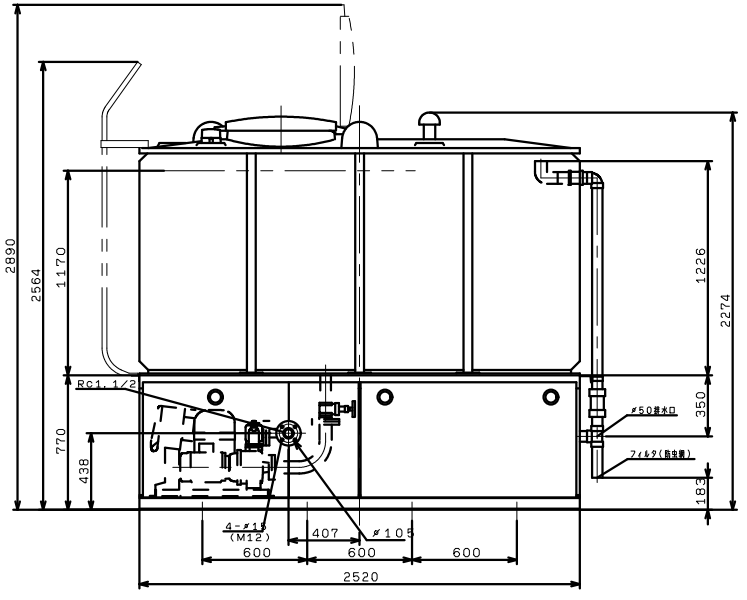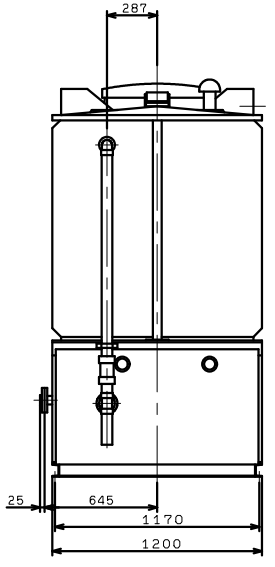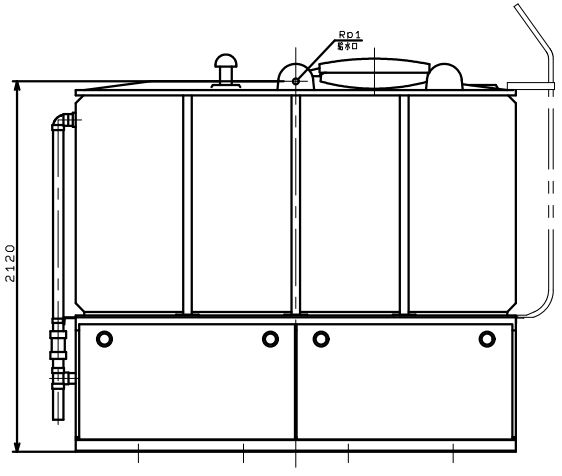KB2TL3-325AE0.75
KB2TL3-326AE0.75
KB2TL3-325AE1.1
KB2TL3-326AE1.1
KB2TL3-405AE1.5
KB2TL3-406AE1.5
KB2TL3-405AE2.2
KB2TL3-406AE2.2
KB2TL3-406AE3.7
KB2TL3-505AE2.2
KB2TL3-506AE2.2
KB2TL3-505AE3.7
KB2TL3-506AE3.7