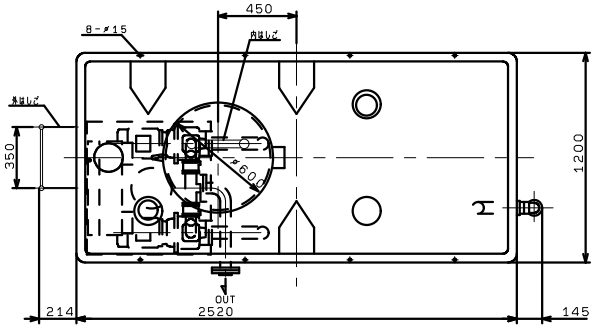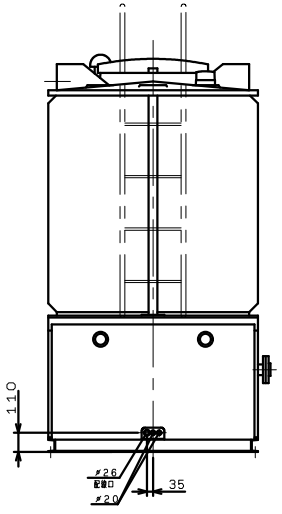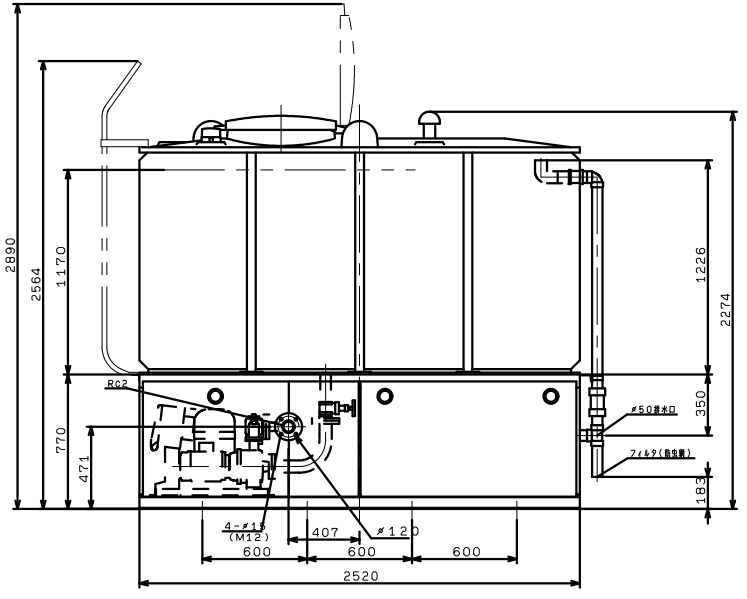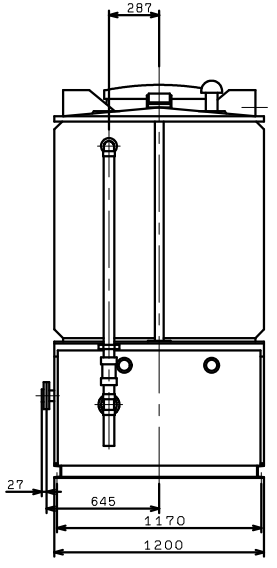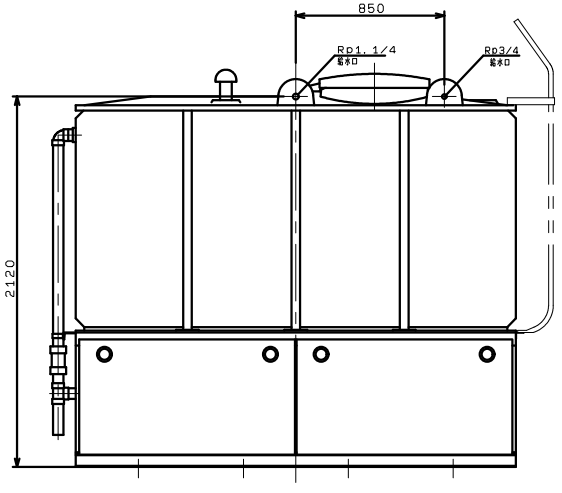KB2TL3-405PE3.7